PROJECT 35: Design and Analysis of 1 Bit Digital Comparator by using Cadence Virtuoso

A Comprehensive Study of Analog Circuits

By: Priya Chaudhary, Astitva Johri and
Bhavya Solanki

Chapters:

List of Figures……..…… 3

1. Introduction …….. 4
2. Brief Description…… 5
3. Circuit Design……. 6-7
   3.1 Schematic Design……... 6
   3.2 Simulation Setup...…….. 6
   3.3 Transient Response……. 6
4. Simulation Results…….. 8
5. Advantages and Disadvantages…….. 9
   5.1 Advantages……. 9
   5.2 Disadvantages……. 9
6. Conclusion…….. 10
7. Frequently Asked Questions (FAQs)…….. 11

LIST OF FIGURES

Figure 3.1 Circuit of 1 Bit Digital Comparator ……..…... 7

Figure 4.1 Simulation Result of 1 Bit Digital Comparator 8

1. INTRODUCTION

A 1-bit digital comparator is a fundamental combinational circuit that compares two binary inputs, A and B, and produces outputs indicating whether A is greater than, less than, or equal to B. The comparator is widely used in digital systems such as arithmetic units, data sorting, and memory addressing. It forms the basic building block for more complex digital comparison operations used in processors and memory units.
A digital comparator operates based on simple logic gate implementations. The performance of a 1-bit comparator largely depends on factors such as propagation delay, power consumption, and circuit complexity. With advancements in VLSI technology, optimizing these parameters is crucial for high-performance computing applications.

In this documentation, we explore the design and analysis of a 1-bit digital comparator using Cadence Virtuoso, a leading EDA tool for VLSI design and simulation. The process includes schematic design, simulation, and verification to ensure a functional and optimized design.

2. BRIEF DESCRIPTION

A 1-bit digital comparator works by evaluating two binary inputs and generating three possible outputs:

- **A > B**: High when A is greater than B.
- **A < B**: High when A is less than B.
- **A = B**: High when A and B are equal.

Boolean Expressions for 1-Bit Comparator

The logical expressions for the three conditions are:

- **A > B:** A * B'
- **A < B:** A' * B
- **A = B:** A ⊕ B' (XNOR Gate)

These expressions can be implemented using basic logic gates such as AND, OR, NOT, and XOR.

Working Principle

The 1-bit comparator evaluates the binary inputs and determines their relationship based on logical operations. This is achieved through:

- **AND and NOT gates** to derive A > B and A < B conditions.
- **XNOR gate** to determine equality.

By cascading multiple 1-bit comparators, multi-bit comparison can be achieved, forming an essential component in digital systems.

3. CIRCUIT DESIGN

3.1 Schematic Design

Design the 1-bit comparator using logic gates in Cadence Virtuoso:

1. **Create a new schematic cell** in Virtuoso.
2. **Add Components**: Use AND, OR, NOT, and XNOR gates.
3. **Implement Logic Equations**:
   - $A > B = A * B'$
   - $A < B = A' * B$
   - $A = B = A \oplus B'$
4. **Connect Components & Label Pins**: Define inputs (A, B) and outputs (A>B, A<B, A=B).
5. **Run DRC Check** to ensure correctness.

3.2 Simulation Setup

Verify the design using transient simulation:

1. **Launch ADE Explorer** and select Spectre as the simulator.
2. **Define Input Stimuli**: Apply pulse waveforms to A and B.
3. **Select Output Variables**: Choose A>B, A<B, and A=B for analysis.
4. **Run the Simulation** for a suitable duration (e.g., 100 ns).
5. **Verify Results** using waveform plots against expected truth table values.

3.3 Transient Response

Analyze the waveform results:

- **Check Output Transitions**: Ensure A>B, A<B, and A=B match expected logic.
- **Measure Propagation Delay**: Evaluate timing performance.
- **Estimate Power Consumption**: Use ADE's power analysis tool.

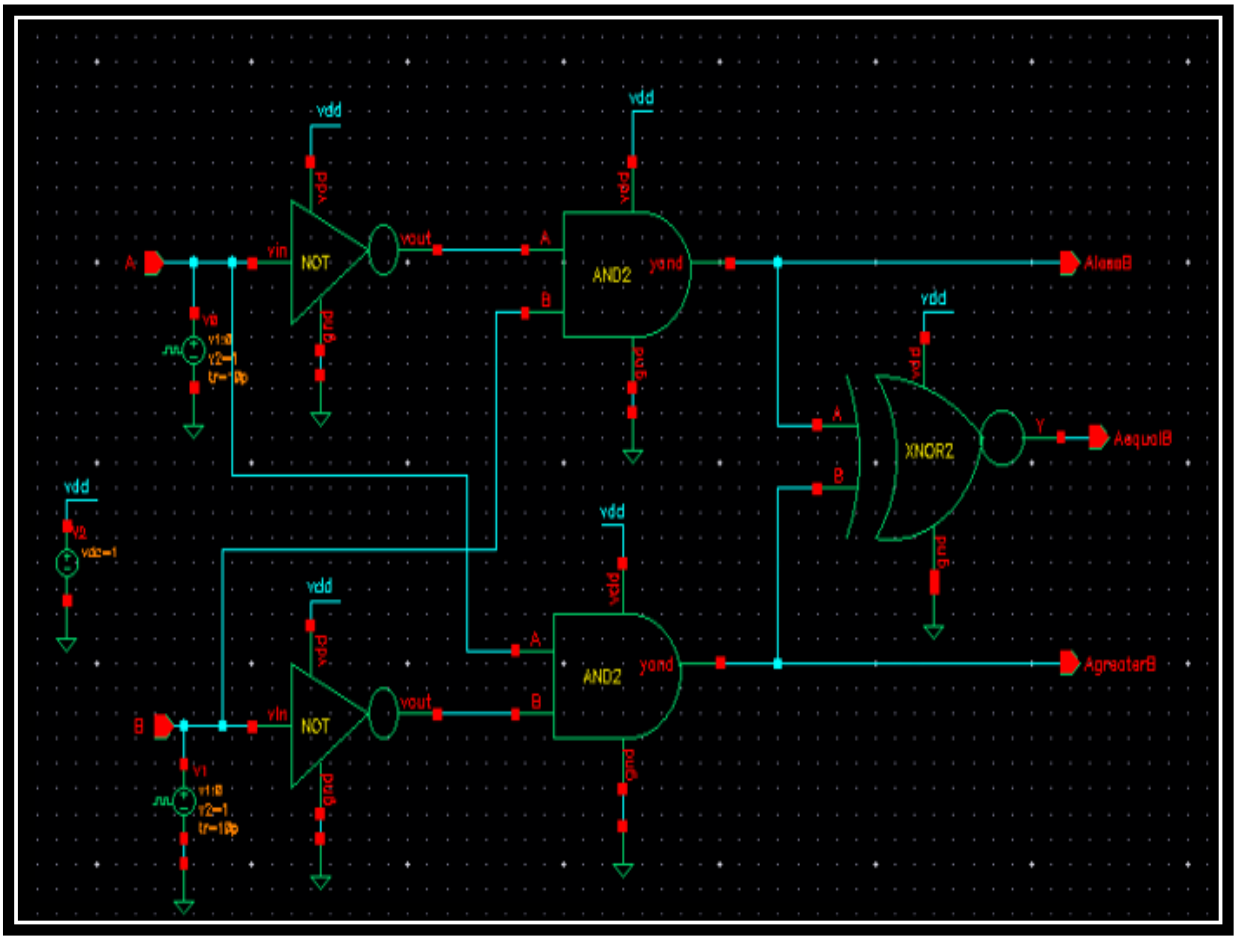

Figure 3.1 Circuit of 1 Bit Digital Comparator

4. SIMULATION RESULTS

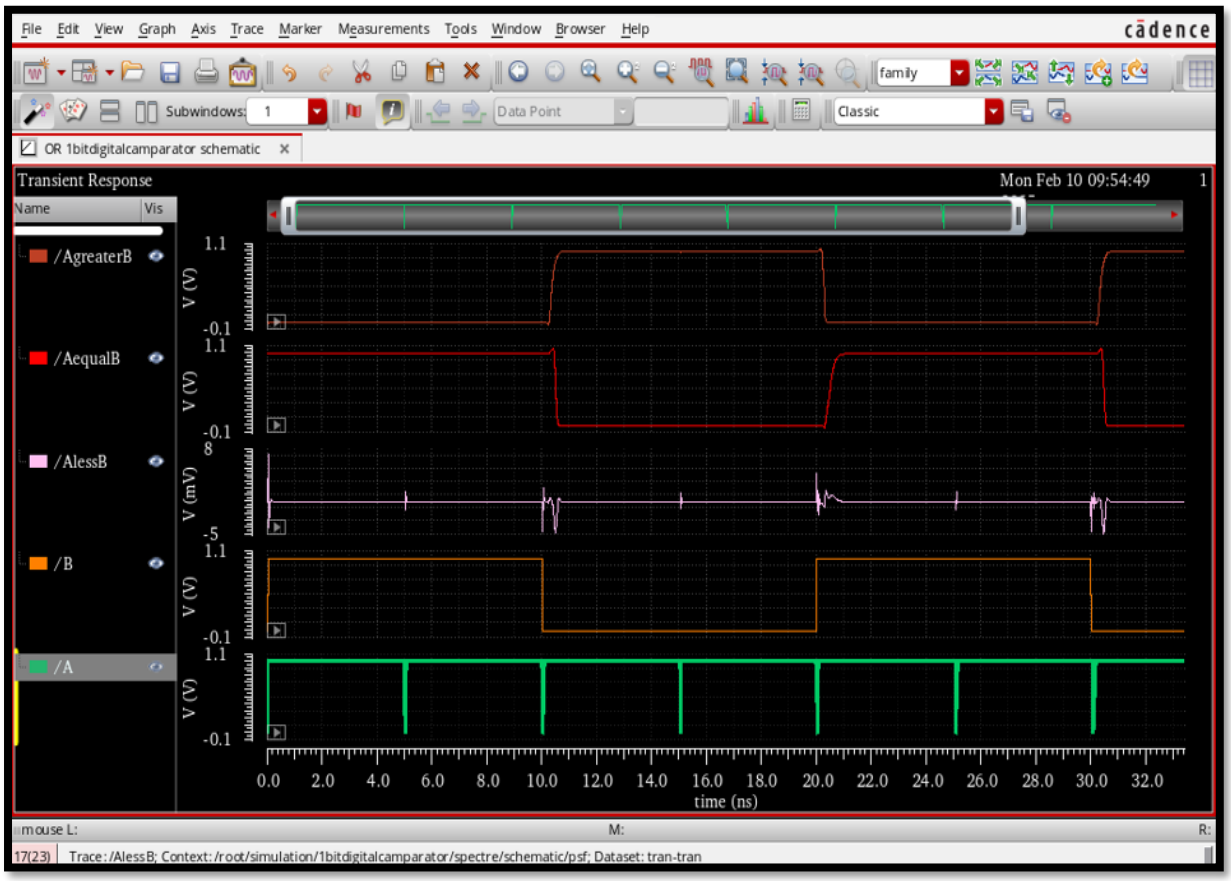

Figure 4.1: Simulation Results of 1 Bit Digital Comparator

5. ADVANTAGES AND DISADVANTAGES

5.1 Advantages:-

1. **Low Power Consumption:** Minimal power usage due to simple logic operations.
2. **Fast Processing:** Provides instant comparison results with minimal delay.
3. **Scalability:** Can be extended to multi-bit comparators for complex operations.
4. **Easy Integration:** Compatible with other digital logic circuits in microprocessors and memory systems.

5.2 Disadvantages:-

1. **Limited Functionality:** Only compares single-bit values; multi-bit comparison requires cascading.
2. **Gate Delays:** Propagation delay increases when implemented in larger circuits.
3. **Increased Complexity in Multi-bit Comparators:** Additional circuitry needed for multi-bit operations increases design complexity.

6. CONCLUSION

The 1-bit digital comparator is a crucial building block in digital logic and computing systems. It is used in arithmetic and logical operations, memory addressing, and data sorting applications. The design and implementation of this circuit using Cadence Virtuoso provide a thorough understanding of schematic development, simulation, and layout verification.

By implementing a 1-bit comparator in Cadence Virtuoso, engineers can analyze performance metrics such as propagation delay, power consumption, and logic correctness. This project also highlights the importance of layout verification techniques such as DRC and LVS to ensure successful fabrication in VLSI design.

Future advancements may focus on optimizing power and delay parameters for high-speed computing applications. Multi-bit comparators, implemented by cascading 1-bit comparators, offer scalability for more complex digital circuits, further enhancing their applicability in modern electronic systems.

7. FREQUENTLY ASKED QUESTIONS (FAQs)

Q1. What is the primary function of a 1-bit digital comparator?

Answer: A 1-bit comparator compares two binary inputs and determines whether one is greater than, less than, or equal to the other.

Q2. Why use Cadence Virtuoso for designing a comparator?

Answer: Cadence Virtuoso provides an integrated environment for schematic design, simulation, layout generation, and verification, making it ideal for precise VLSI implementations.

Q3. How can I extend a 1-bit comparator to an N-bit comparator?

Answer: By cascading multiple 1-bit comparators, using additional logic for carry-in and carry-out conditions.

Q4. What simulation results should be expected for a 1-bit comparator?

Answer: The outputs should match the truth table, verifying that A > B, A < B, or A = B conditions are correctly detected.

Q5. What are the primary challenges in designing a 1-bit comparator in Cadence Virtuoso?

Answer: Ensuring correct logic implementation, minimizing propagation delay, and verifying layout correctness using DRC and LVS checks.